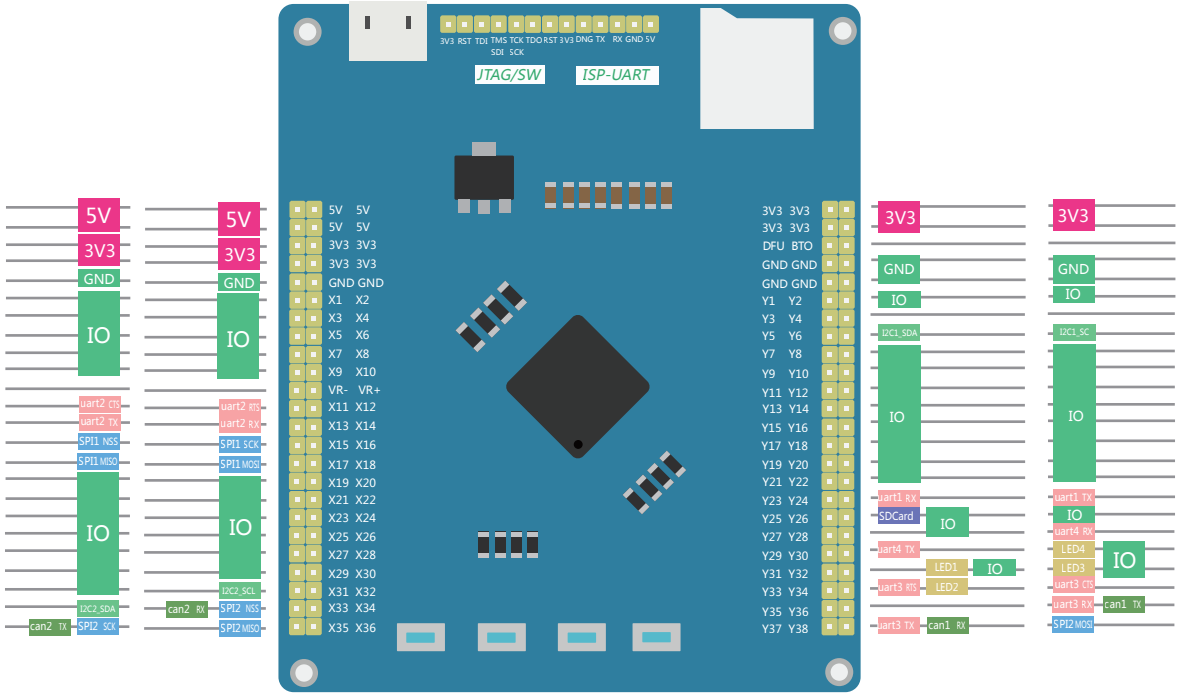
3V3 RST TDI TMS TCK TDO RST 3V3 DNG TX RX GND 5V
SDI SCK
JTAG/SW
ISP-UART
5V 5V
5V 5V
3V3 3V3
3V3 3V3
GND GND
X1 X2
X3 X4
X5 X6
X7 X8
X9 X10
VR- VR+
X11 X12
X13 X14
X15 X16
X17 X18
X19 X20
X21 X22
X23 X24
X25 X26
X27 X28
X29 X30
X31 X32
X33 X34
X35 X36
3V3 3V3
3V3 3V3
DFU BTO
GND GND
GND GND
Y1 Y2
Y3 Y4
Y5 Y6
Y7 Y8
Y9 Y10
Y11 Y12
Y13 Y14
Y15 Y16
Y17 Y18
Y19 Y20
Y21 Y22
Y23 Y24
Y25 Y26
Y27 Y28
Y29 Y30
Y31 Y32
Y33 Y34
Y35 Y36
Y37 Y38
5V
3V3
GND
IO
uart2 CTS
uart2 TX
SPI1 NSS
SPI1 MISO
IO
I2C2_SDA
can2 TX
SPI2 SCK
5V
3V3
GND
IO
uart2 RTS
uart2 RX
SPI1 SCK
SPI1 MOSI
IO
I2C2_SCL
can2 RX
SPI2 NSS
SPI2 MISO
3V3
GND
IO
I2C1_SDA
IO
uart1 RX
SDCard
IO
uart4 TX
LED1
IO
uart3 RTS
LED2
uart3 TX
can1 RX
3V3
GND
IO
I2C1_SC
IO
uart1 TX
IO
uart4 RX
LED4
LED3
IO
uart3 CTS
uart3 RX
can1 TX
SPI2 MOSI